60cm Fan-Forced Oven

—

1065.1

FEATURES

- 65L capacity
- S/steel & black optical glass
- Touch controls
- LED programmable timer
- Cavity cooling system
- Matt black, brushed steel handle

ACCESSORIES

- Enamelled baking tray
- Chrome baking tray insert
- Chrome shelf with safety lock

REQUIREMENTS

Supplied with 15 amp plug

Maximum Power:

- ▷ 3.1kW

5 × COOKING FUNCTIONS

- ▷ Fan-Forced
- ▷ Grill
- ▷ Fan & Grill
- ▷ Defrost
- ▷ Light

PRODUCT DIMENSIONS

Packaged (w, d, h mm):

- ▷ 620 × 620 × 580mm

Physical (w, d, h mm):

- ▷ 595 × 575 × 595mm

Weight:

- ▷ 42kg

CLEANING

Easy to remove inner door glass

Easy to remove door with quick release hinges

Oven interior features easy to clean enamelling

Quick release, heavy duty chrome side racks

SAFETY

Triple glazed cool touch door

Child safe oven activation process

WARRANTY

24 Months
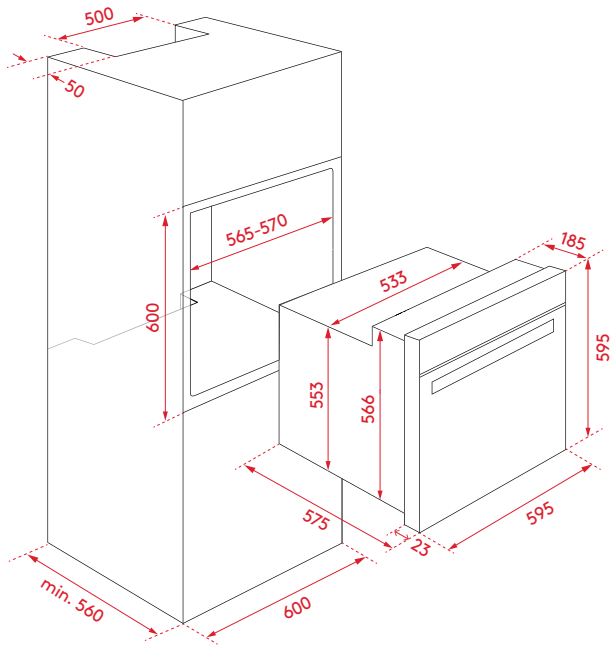
INSTALLATION